LFC-1000

Biodigester

power knot



Top view with detail of drain pipe

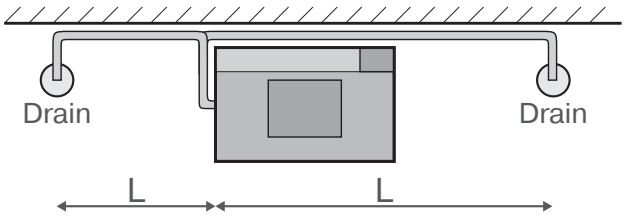

Only one drain is required on left side or right side of machine
Pipes normally run along wall for neatness, but can be direct
L = length of pipe run: 400 cm (160") maximum; 3 of 90° bends maximum; do not run pipes under the biodigester

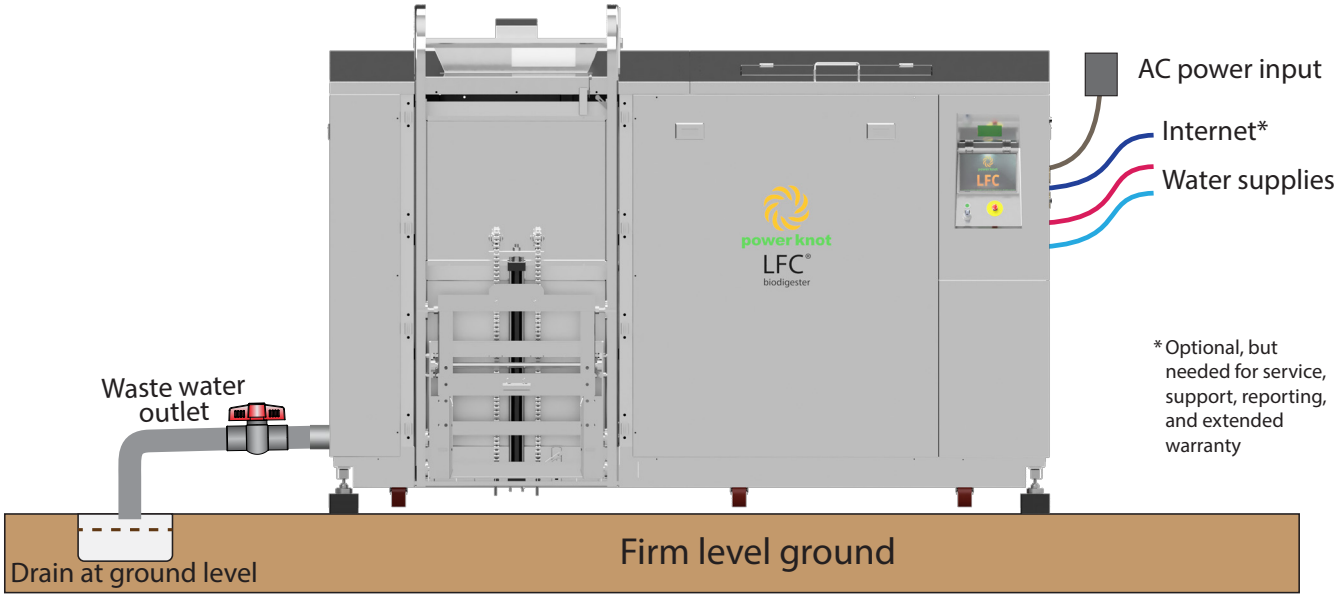

*Optional, but needed for service, support, reporting, and extended warranty

LFC-1000

Installation Requirements

Maximum capacity of food waste
1000 kg (2200 lb)
1250 litre (320 gallon)

Digestion of food waste per day
350–3000 kg (770–6600 lb) typical

Construction
All stainless steel (chassis, side panels, drum, shaft, arms, paddles, and load cells). Chassis is mirror finish (EN 10088-2 specification 2P)

Operating environment
Indoors or covered patio
Must not be exposed to rain, snow, or sunshine

Ingress protection
IP54 – splash proof and dust proof

Operating altitude
0~3000 m (9800 ft)

Ambient operating temperature
10°C~40°C (50°F~104°F) when altitude is less than 1000 m (3300 ft); reduce linearly to 24°C (75°F) at 3000 m

Floor surface flatness required
±5 mm (±0.2")

Weight when empty
1638 kg (3615 lb)

Moving and positioning
Machine is rolled into place with casters
Machine is raised once in position and supported by feet and rubber pads

Weight when full
3138 kg (6920 lb) maximum

Load and pressure per pad
1059 kg (2335 lb) maximum
460 kPa (67 psi) maximum

Inlet port
DN 115 sanitary fitting; supplied with bellows terminated in DN 100 sanitary fitting. Relay output signals to host system capacity of LFC biodigester

Bin lifter and NFC cards
Maximum lift: 70 kg (155 lb)
Different models accept:
ANSI Z245.60 Type B (N. America)
24, 32, and 35 gallon roller bins
EN 840-1 Type b (rest of world)
60, 80, 120, and 140 litre wheelie bins

Bin lifter and automatic door are activated by an NFC card. Can use up to 100 different registered NFC cards

Space required around machine
Left side: 40 cm (16") minimum, 60 cm (24") preferred. 100 cm (39") is required for servicing
Right side: 40 cm (16") minimum, 60 cm (24") preferred. 150 cm (60") is required for servicing
Back: 10 cm (4")
Front: 150 cm (60") minimum

Water inlets
Filters: filters are mounted on machine to remove particles
Fitting: DN15 (½") female
Use flexible hose pipes to allow machine to move freely. Install valves to disconnect water for servicing and backflow prevention devices if required
Pressure: 275 to 675 kPa
(40 to 98 psi, 2.8 to 6.9 kg/cm²)
Flow rate: 20 litre per minute (5 gpm) max. @ 450 kPa (65 psi, 4.5 kg/cm²)
Hot: 45°C~80°C (113°F~176°F)
Cold: 5°C~45°C (41°F~113°F)

Water input per day
3000 litre (800 gallon) typical

Water outlet
Typically use flexible coupling on output to permit machine to move freely
Install stop valve on outlet pipe (used for commissioning)
Slope pipe down by about 1 in 45 (1.3°)

Drain
Type: Must exit to sewer (not storm drain); grease trap is required in most jurisdictions
Size: 100 mm (4") minimum

Total water output per day
4000 litre (1050 gallon), typical

Flow rate of waste water out
26 l/min (7 gpm), maximum
2.8 l/min (0.7 gpm), typical average

AC supply (order one type)
Without neutral (3L+PE), 50 Hz or 60 Hz
208 V: 187 V to 230 V
250 V: 230 V to 260 V

With neutral (3L+N+PE), 50 Hz or 60 Hz
400 V: 360 V to 440 V
440 V: 400 V to 480 V

External circuit breaker required: 15 A

AC power outlet
Can wire directly (without a plug and socket). Facility power outlet must be accessible by operator and have a safety disconnect

Emergency switch is fitted on chassis

AC power cord
Length of cable on machine: 180 cm (6'); L15-20 plug fitted on 208 V machine; no plug on other options

Maximum ac power
4.9 kW

Electrical energy per day
29 kWh typical

Heat generated by digestion
1 kW ~ 4 kW, 2 kW typical

User interface
22 mm 3-color LED
7" touchscreen with 65k colors

Ethernet
RJ45, 100 baseT
DHCP or fixed IP address
Connect to Internet with direct cable, Wi-Fi client, or GSM modem
Automatically connects to LFC Cloud for remote support, reporting, and monitoring (included in purchase price)

Relay signals
SD13-3 connector to indicate LFC-1000 status to external equipment

Powerzyme
Microorganisms and enzymes
10 litre, included with initial purchase

Powerchips
Medium for microorganisms
1000 litre, included with initial purchase

Operating lifetime
Expected to be 15 to 25 years

Warranty
3 years on all parts and components
(1 year for marine, security, and rentals)
Subject to terms and conditions

Hygiene
NSF/ANSI 13-2024

Weighing
NTEP certified to NIST Handbook 44

Safety
Certified to UL430 edition 8
(waste disposal machines)
CAN/CSA-C22.2 No. 60335-1:11 R16
CAN/CSA-C22.2 No. 60335-2-16:16
EN 60335-1:2012+A11:2014+A13:2017
+A1:2019+ A14:2019+A2:2019
EN 60335-2-16:2003+A1:2008+A2:2012
+A11:2018

EMC and EMI
47 CFR FCC part 15, subpart B, class B
ICES-003:2016 Issue 6, class B
ANSI C63.4:2014
EN 61000-6-1:2007 & 2005
EN 61000-6-3:2007+A1:2011 & 2006
CISPR 16-2-3:2016
CISPR 16-2-1:2006
CISPR 16-1-2:2003 + A1:2004 + A2:2006
EN 61000-3-2:2005 +A1:2008 +A2:2009
EN 61000-3-3:2013
EN 61000-4-2:1995
EN 61000-4-3:2006
EN 61000-4-4:2004
EN 61000-4-5:2006
EN 61000-4-6:2014
EN 61000-4-8:1993
EN 61000-4-11:2004

EU directives
Low Voltage Directive: 2014 / 35 / EU
EMC Directive: 2014 / 30 / EU
RoHS Directive: 2011 / 65 / EC
WEEE Directive: 2012 / 19 / EC

For complete details see User's Manual

LFC-1000

Dimensions in mm ±2 mm

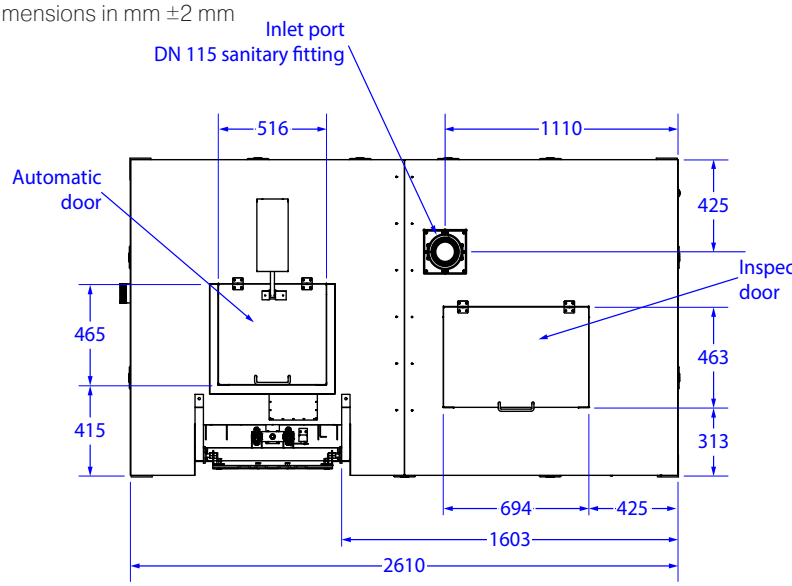

Top

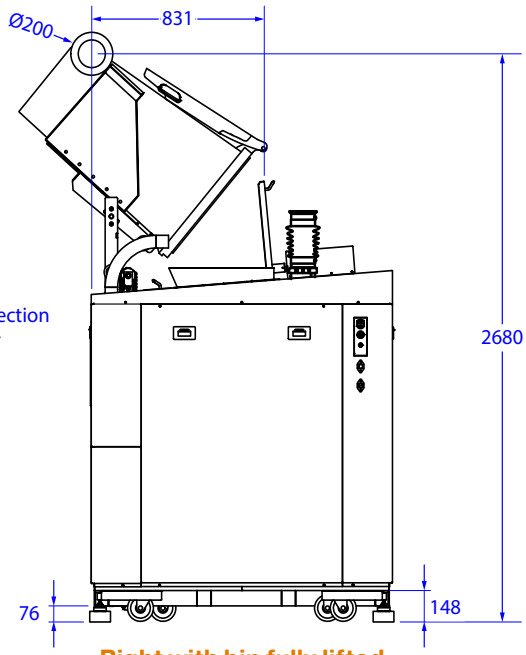

Right with bin fully lifted

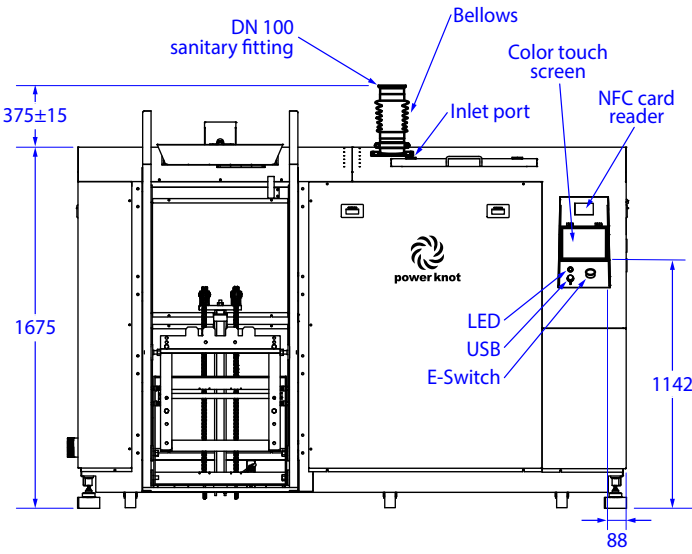

Front

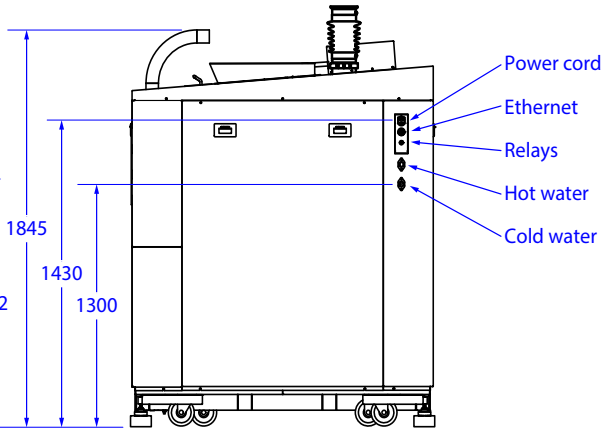

Right

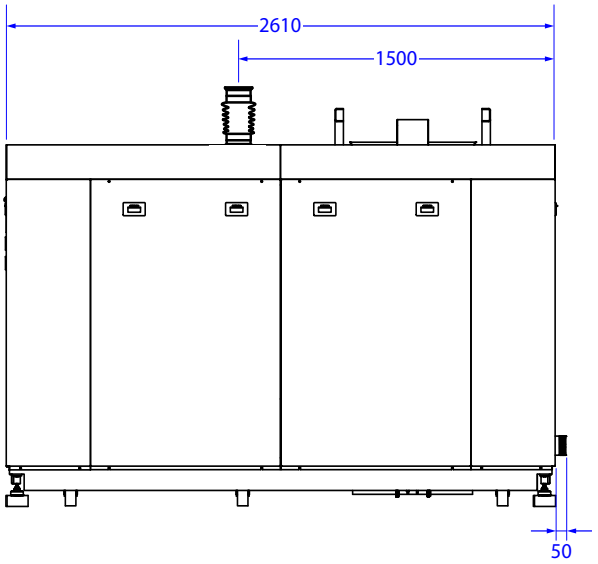

Back

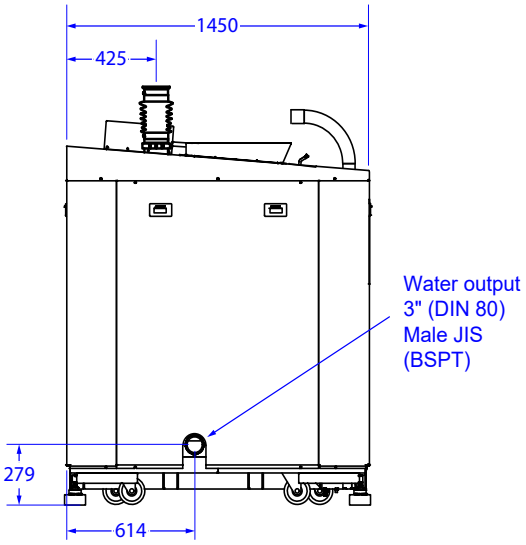

Left

LFC-1000

Dimensions in inches ±0.1"
(derived from mm)

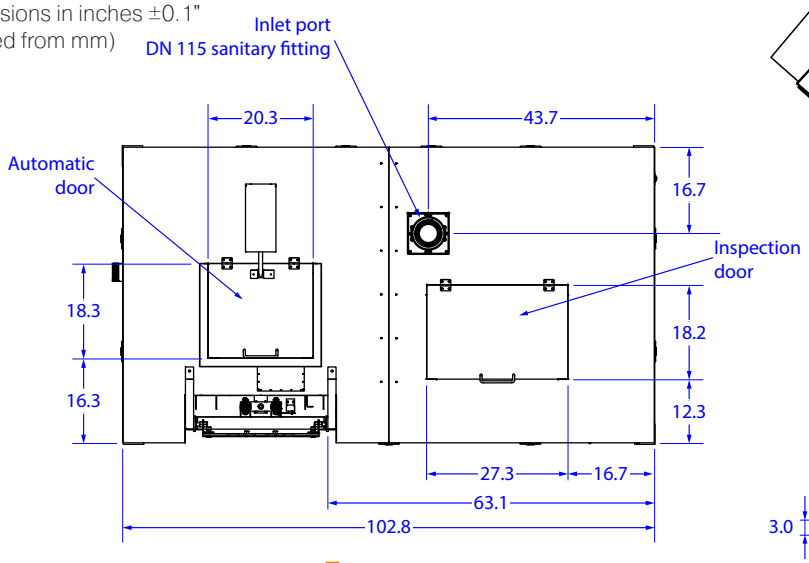

Top

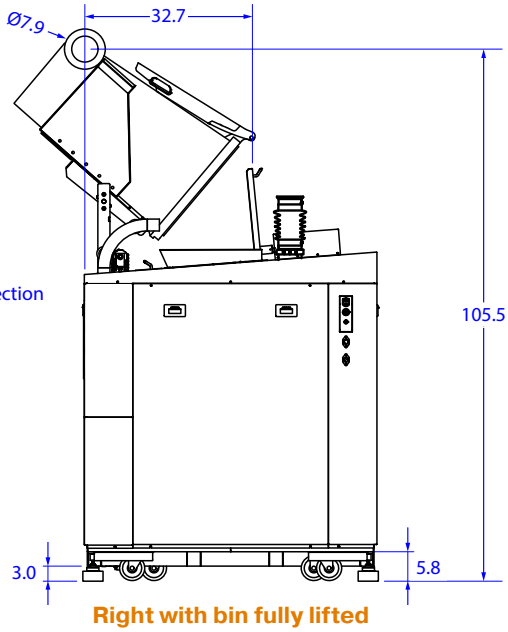

Right with bin fully lifted

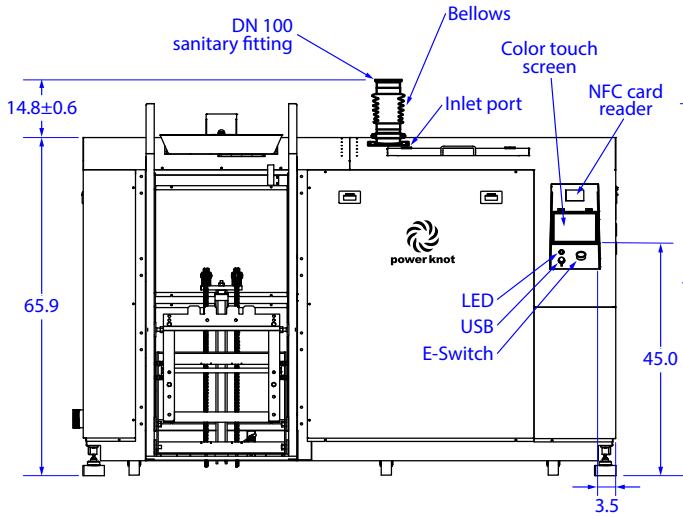

Front

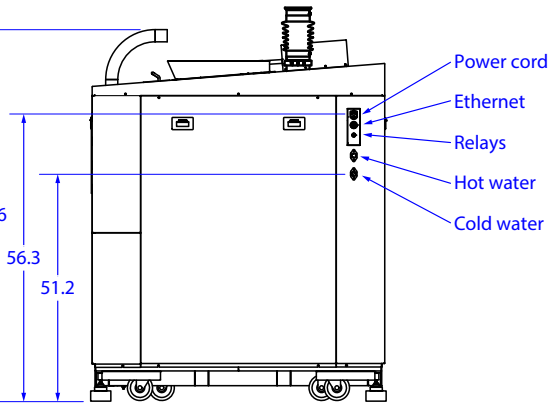

Right

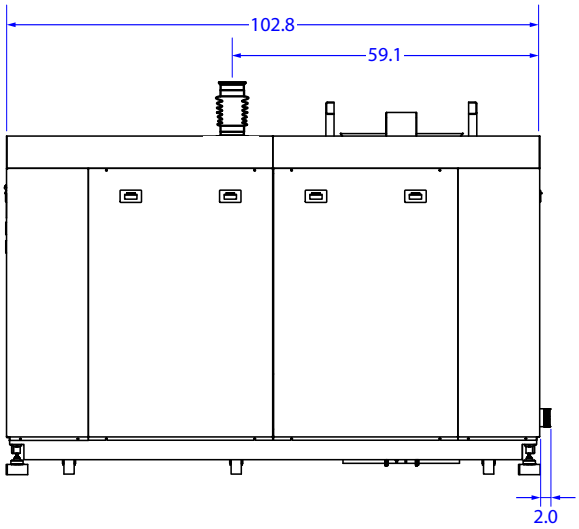

Back

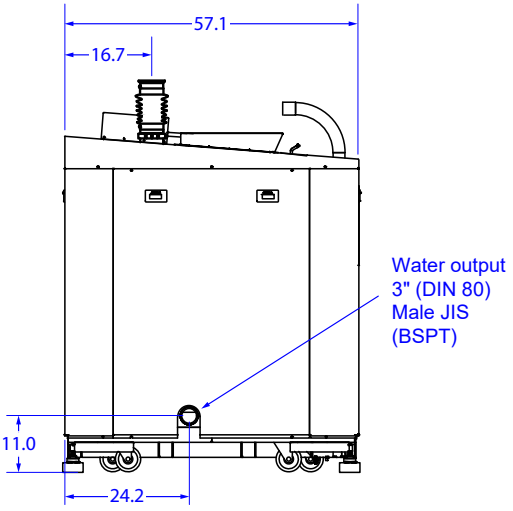

Left

Power Knot LLC | 47613 Warm Springs Blvd | Fremont, CA 94539 USA | +1-408-889-8433 | info@powerknot.com | www.powerknot.com

Power Knot, the Power Knot logo, the Power Knot mark, LFC, LFC Cloud, Powerchips, and Powerzyme are trademarks or registered trademarks of Power Knot LLC. All other trademarks used herein are the property of their respective owners. Copyright © 2009–2026 Power Knot LLC; all rights are reserved. Specifications are subject to change at any time without notice. Document number 96-01040-47, 08 October 2026.