LCD-25

power knot

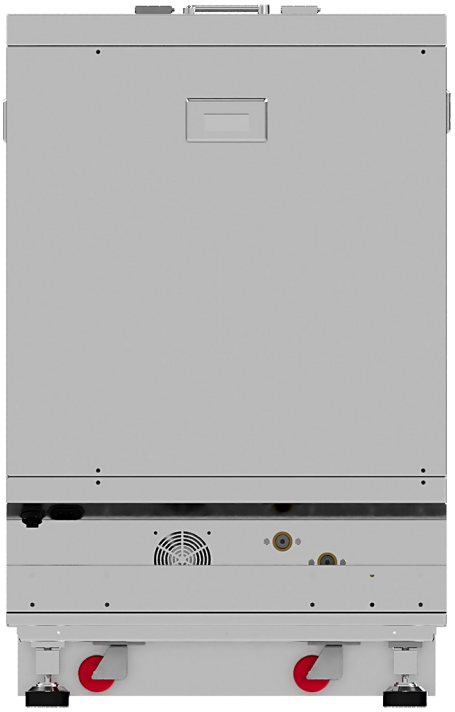

Rear view



Connection diagram

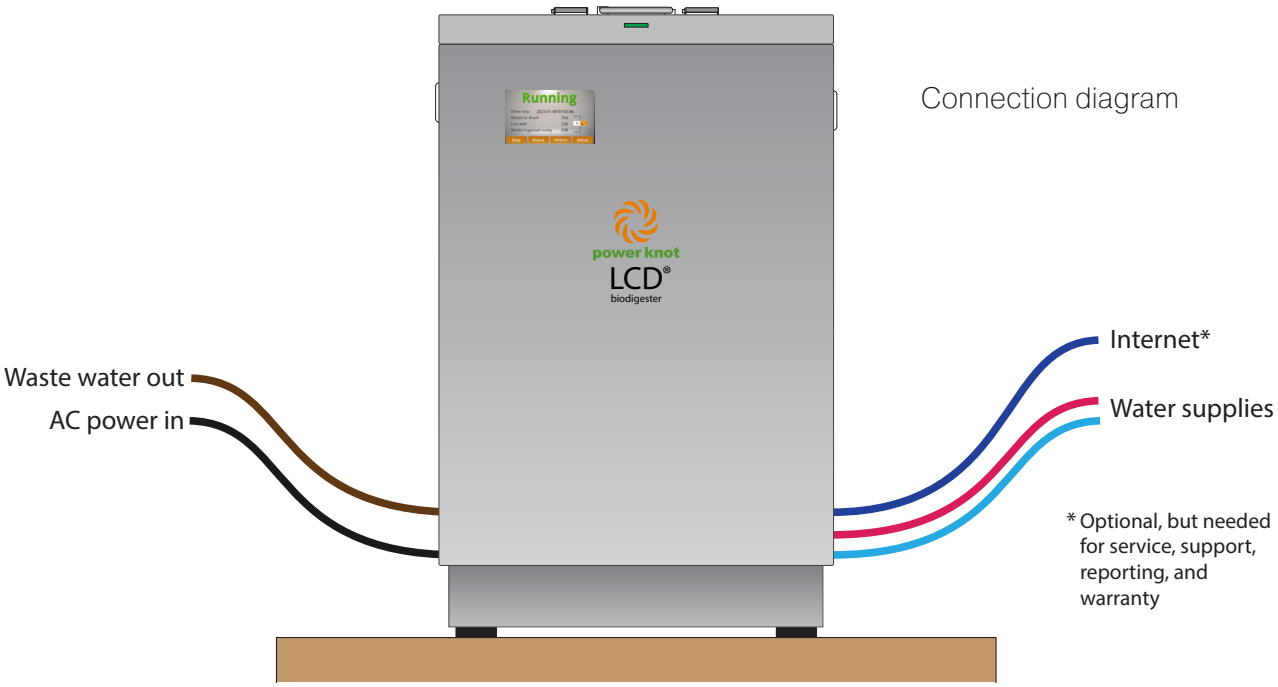

* Optional, but needed for service, support, reporting, and warranty

LCD-25

Installation Requirements

Maximum capacity ofcannabis waste

11 kg (25 lb)
14 litre (4 gallon)

Digestion of cannabis waste

3–34 kg (7–75 lb) per day

Construction

All 316 stainless steel (chassis, side panels, drum, shaft, arms, paddles, and load cells). Chassis is mirror finish (EN 10088-2 specification 2P)

Operating environment

Indoors or covered patio

Must not be exposed to rain, snow, or sunshine

Ingress protection

IP54 – splash proof and dust proof

Operating altitude

0~3000 m (9800 ft)

Ambient operating temperature

12°C~38°C (54°F~100°F) when altitude is less than 1000 m (3300 ft); reduce linearly to 24°C (75°F) at 3000 m

Floor surface flatness required

±15 mm (0.6")

Weight when empty

128 kg (285 lb)

Moving and positioning

Machine is rolled into place with casters

Machine is raised once in position and supported by feet and rubber pads

Weight when full

166 kg (366 lb) maximum

Load and pressure per pad

56 kg (123 lb) maximum
50 kPa (8 psi) maximum

Space required around machine

Left side, right side, and back: can each be flush against panels or walls.

Front: can be flush for operation but requires 60 cm (24") for loading

Water inlets

Filters: use external filters to remove particles and hardness
Fitting: DN15 (½" NPT) female
Pipes: Use flexible hose pipes to allow machine to move freely. Install valves to disconnect water for servicing
Backflow prevention: devices are installed internally
Pressure: 200 to 675 kPa
(29 to 98 psi, 2.0 to 6.9 kg/cm²)
Flow rate: 7.5 litre per minute (2 gpm) max. @ 450 kPa (65 psi, 4.5 kg/cm²)
Hot water: 45°C~75°C (113°F~167°F)
Cold water: 5°C~35°C (41°F~95°F)

The supplied water is mixed internally. The temperatures must be such that the internal temperature of 45°C (113°F) can be attained.

Water input per day

75 litre (20 gallon) typical

Waste water outlet

Fitting: DN15 (½" NPT) female

Pipe: Use flexible coupling on output to permit machine to move freely. Pipe must be 19 mm (¾")

Connect waste water outlet higher than machine or install a stop valve on the outlet pipe (used for commissioning)

Drain

Type: Must exit to sewer (not storm drain); grease trap is required in most jurisdictions

Height: Internal pump can pump water up to a height of 2 m (6.5') on pipe without 90° bends. Internal one way valve stops flow back.

Total waste water output per day

100 litre (26 gallon), typical

Flow rate of waste water out

10 l/min (2.6 gpm), maximum
0.1 l/min (0.02 gpm), typical average

AC supply

Universal ac input: 100 V to 260 V, 47 Hz to 63 Hz
Single phase + PE
Circuit breaker: 6 A

Inlet socket: IEC 60320-1 C14, fused with two 6.3 A 5x20 mm fuses

AC power cord

Ordered separately to suit destination ac power source. Length: 180 cm (6')

Outlet must be accessible by operator and have a safety disconnect

Maximum power

180 W

Energy per day

0.8 kWh typical

Heat generated by digestion

25 W ~ 100 W, 50 W typical

User interface

3 color LED through diffused slot

5" touchscreen with 65k colors

Ethernet

RJ45, 100 baseT
DHCP or fixed IP address

Connect to Internet with direct cable, Wi-Fi client, or GSM modem

Automatically connects to LFC Cloud for remote support, reporting, and monitoring (included in purchase price). Connection is required to extend warranty to 3 years

Powerzyme

(Microorganisms and enzymes)
0.25 litre, included with initial purchase

Powerchips

(Medium for microorganisms)
25 litre, included with initial purchase

Operating lifetime

Expected to be 15 to 25 years

Warranty

3 years on all parts and components when connected to the LFC Cloud

1 year for marine and rental machines, or when not connected to the LFC Cloud

Safety

Certified to UL430 edition 8
(waste disposal machines)
CAN/CSA-C22.2 No. 60335-1:11 R16
CAN/CSA-C22.2 No. 60335-2-16:16
EN 60335-1:2012+A11:2014+A13:2017
+A1:2019+ A14:2019+A2:2019
EN 60335-2-16:2003+A1:2008+A2:2012
+A11:2018

EMC and EMI

47 CFR FCC part 15, subpart B, class B
ICES-003:2016 Issue 6, class B
ANSI C63.4:2014
EN 61000-6-1:2007 & 2005
EN 61000-6-3:2007+A1:2011 & 2006
CISPR 16-2-3:2016
CISPR 16-2-1:2006
CISPR 16-1-2:2003 + A1:2004 + A2:2006
EN 61000-3-2:2005 +A1:2008 +A2:2009
EN 61000-3-3:2013
EN 61000-4-2:1995
EN 61000-4-3:2006
EN 61000-4-4:2004
EN 61000-4-5:2006
EN 61000-4-6:2014
EN 61000-4-8:1993
EN 61000-4-11:2004

EU directives

Low Voltage Directive: 2014 / 35 / EU
EMC Directive: 2014 / 30 / EU
RoHS Directive: 2011 / 65 / EC
WEEE Directive: 2012 / 19 / EC

For complete details see User's Manual

LCD-25

Dimensions in mm ±2 mm

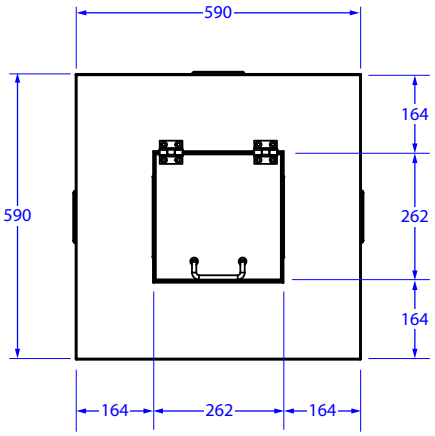

Top

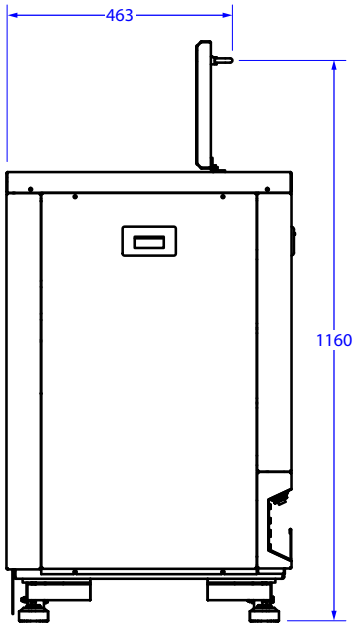

Right with door fully open

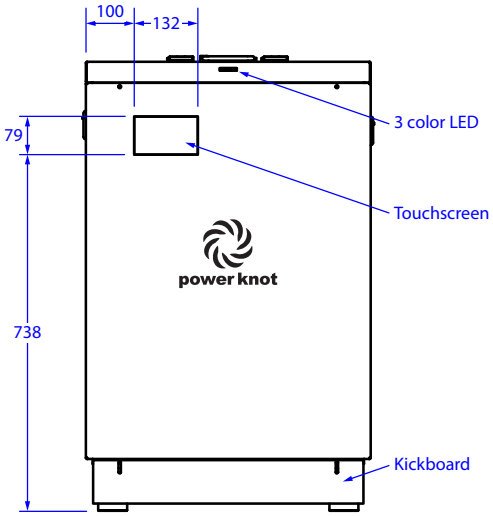

Front

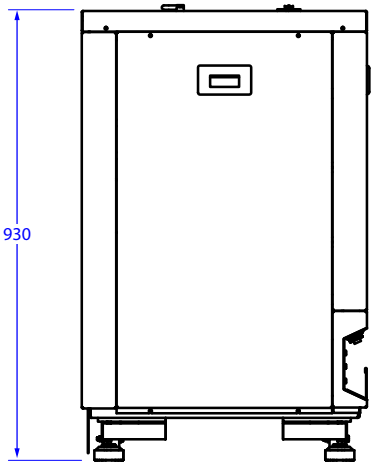

Right

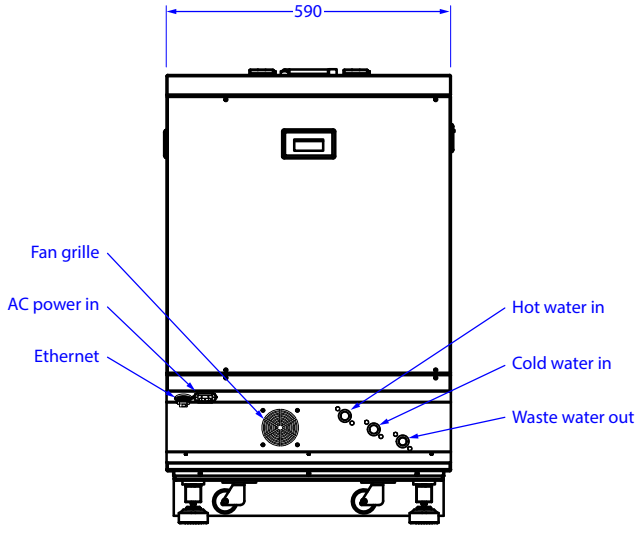

Back

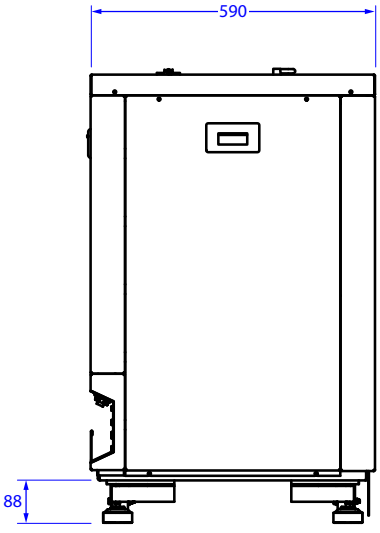

Left

LCD-25

Dimensions in inches ±0.1"
(derived from mm)

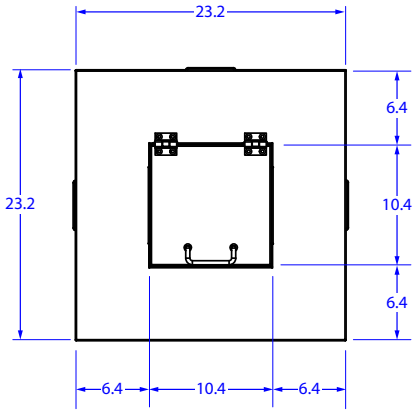

Top

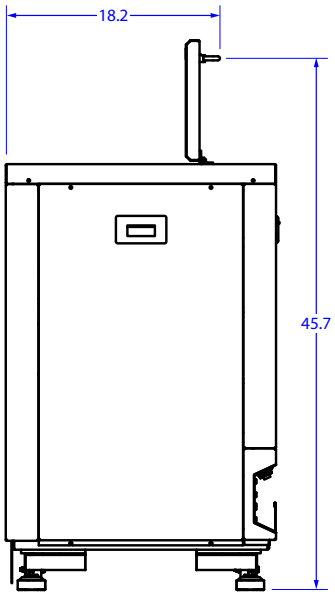

Right with door fully open

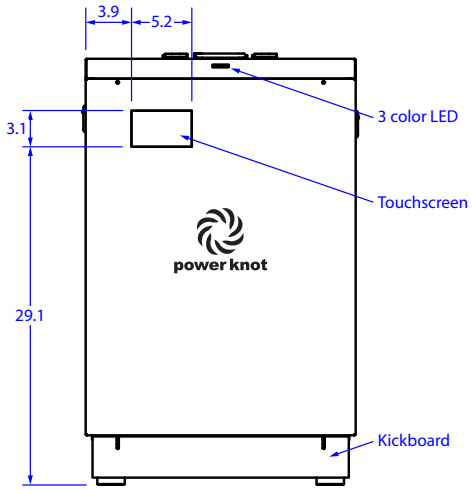

Front

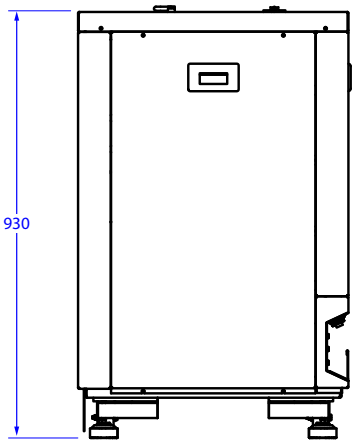

Right

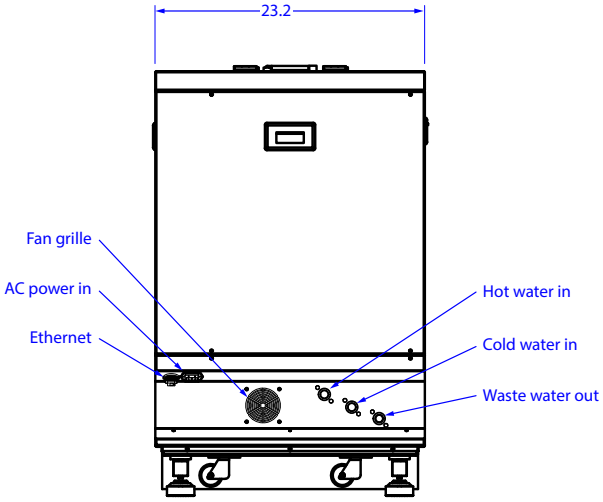

Back

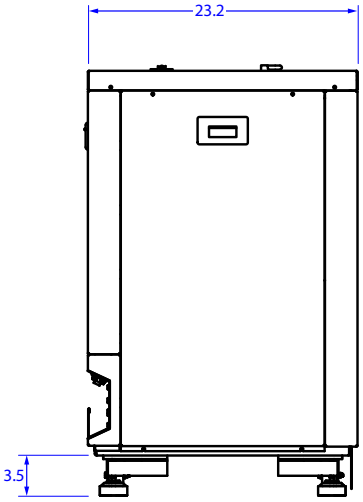

Left

Power Knot LLC | 47613 Warm Springs Blvd | Fremont, CA 94539 USA | +1-408-889-8433 | info@powerknot.com | www.powerknot.com

Power Knot, the Power Knot logo, the Power Knot mark, LCD, LFC, and LFC Cloud are trademarks or registered trademarks of Power Knot LLC. All other trademarks used herein are the property of their respective owners. Copyright © 2009–2026 Power Knot LLC; all rights are reserved. Specifications are subject to change at any time without notice. Document number 96-01150-47, 08 October 2026